WSK026

数控金刚线蓝宝石开方机

WSK026 CNC cylindrical plain grinding machine for sapphire

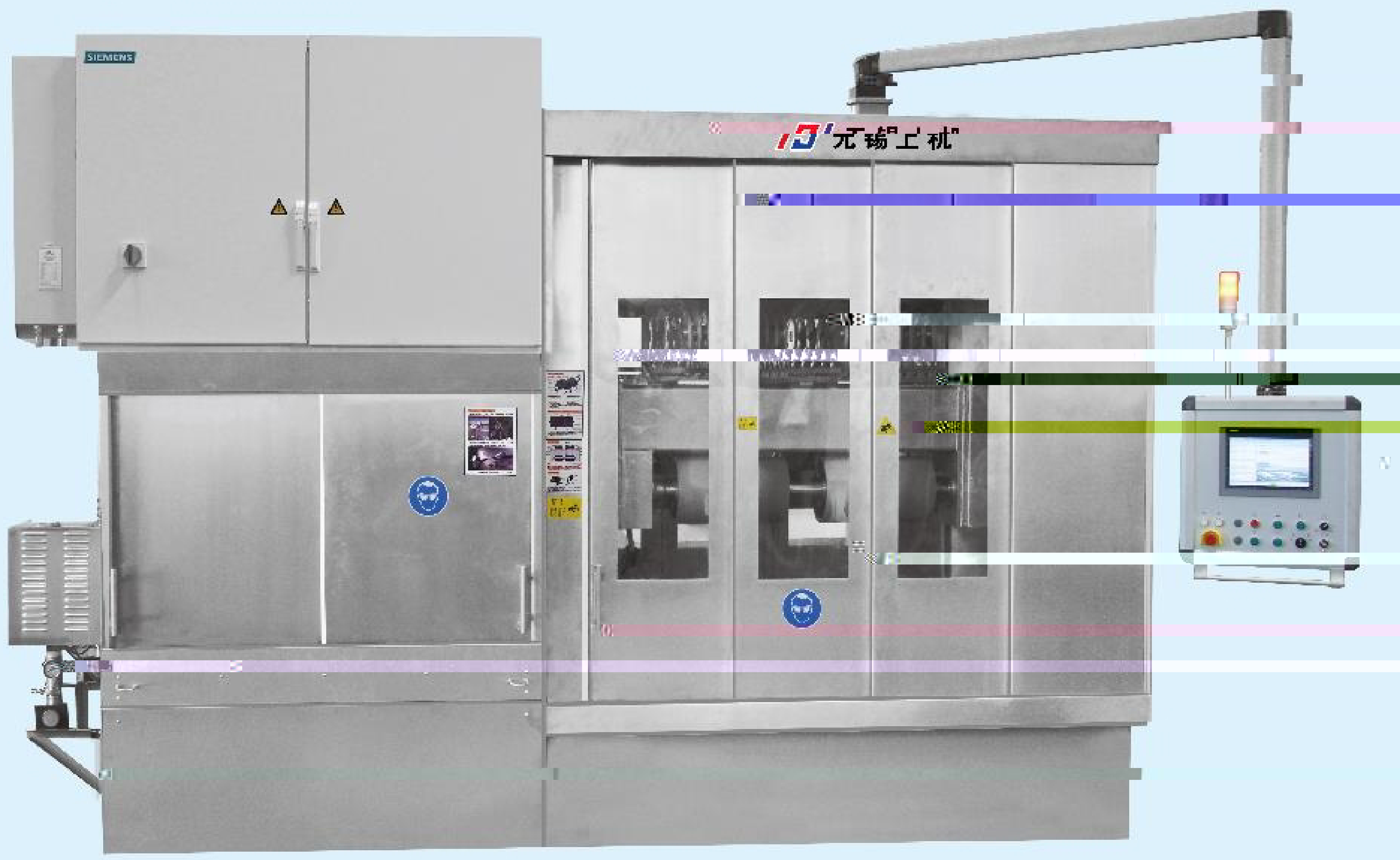

- 本设备为金刚线多线开方机，主要用于新能源行业，LED蓝宝石锭的开方、切视窗片以及半导体行业，单晶硅棒、多晶硅锭的开方，是新能源的主要配套设备；
- 采用西门子控制技术的一体化PC机，15″触控屏；
- 设备布局合理，机械强度高而且热稳定性好，整体外观采用全封闭不锈钢设计；
- 摇摆单元优化了金刚线切割蓝宝石的性能，缩短了切割时间，并提高了晶锭的端面质量；减少滑轮数量的设计，更有效地降低线耗、滑轮等耗材；
- 模块化组合，上下工作台都可进行360°+90°的旋转调节晶向，方便切出任意尺寸；
- 通过调整切割轮上的线宽，方便切割各种尺寸的条块；
- 优化张力控制系统，利用高张力切割，保证了开方的质量和效率；
- 利用操作手柄，可以快速布置线网，缩短了设备待机时间，减少人员管理成本；
- 采用双工位，多方位调节晶向，以及灵活的布线配置，可应用于蓝宝石的开方以及切片和截断，切割视窗玻璃等功能。

- This equipment is diamond wire saw squarer, applied in New Energy industry, processing LED sapphire ingots, cutting windows film and used in semi-conductor industry, squaring monocrystalline silicon round bar and polysilicon ingots, which is the main equipment for new energy industry.
- Apply integrated PC of SIEMENS controlling system, 15" touch screen.
- Reasonable layout, high mechanical strength and perfect thermal stability. Overall appearance applies full-closed stainless steel design.
- Swing unit optimizes performance of slicing sapphire, shortening time, and improving end-face quality of ingots, reducing quantity of pulleys, which decreases consumables such as wire and pulleys.
- The equipment can not only multi-line slice, but also single line slice can be combined as modularization. Both upper and lower worktables can adjust crystal orientation by 360°+90°, which can slice whatever size.
- By regulating depth of wire on cutting wheel, slice whatever size of block.
- Optimize tension of control system, by high-tension slicing, ensuring quality and efficiency of squaring.
- Use operating handle, fast layout cable, shortening time of standby and reducing management cost.
- Apply double station, adjust crystal orientation on multi-aspect. Flexible layout, and used in squaring, slicing and cutting.

技术规格参数 Specifications and Technical Parameters

加工工件参数Workpiece parameters	
工件规格Specifications	Φ500x500mmx2件
工件重量Weight	＜250Kgx2件
主要参数Main parameters	
金刚线直径Diameter of diamond wire	0.30~0.5mm
平行线网数量Quantity of parallel wire	根据导轮槽距而定 according to slot pitch of guide wheel
线网间距Space between line	开方square≥28mm；切片slice≥0.5mm
工件台速度Speed of worktable	开方square：0.05~3mm/min　切片slice：0.03~1mm/min
加速度Acceleration	5-10m/s²(max)
线速度Line speed	30m/s(max)
摇摆角度Swing angle	±8°
摇摆速度Swing speed	20度/秒 20°/s(max)
工件晶向Workpiece crystal orientation	360°＋90°
切割方向Slicing orientation	前进或后退切割双向互换切割 forward or backward slice, two-way exchange of cutting
电源供给及配套设施Power supply and matched facility	
电源要求Requirement of power	电压voltage：380V，频率frequency：50Hz
冷却水流入温度Cooling water	10℃-20℃
周围环境温度Environmental temperature	15℃-25℃

设备切割示意图 cutting sketch map

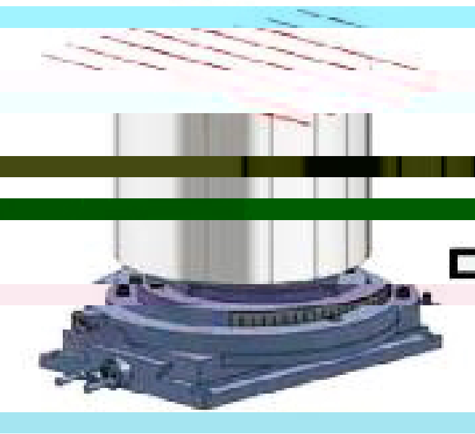
手机屏开方
squaring of cell phone screen

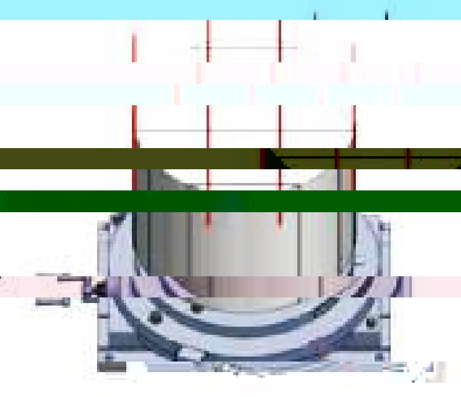
转90°开方
squaring turn by 90°

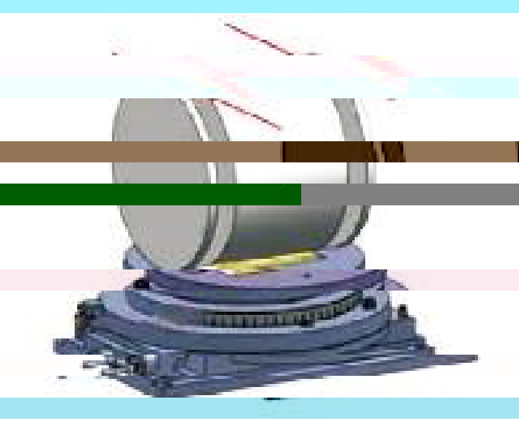
去两端头、尾
cut both head and tail

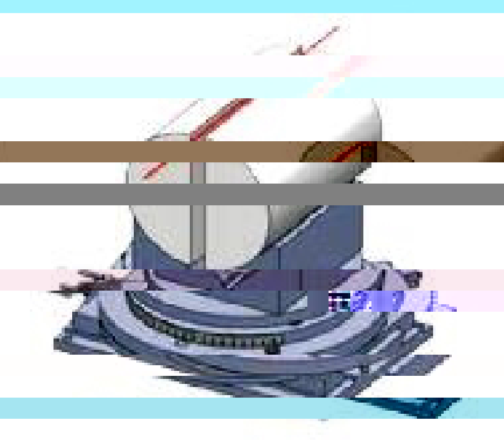
剖 开
cut open

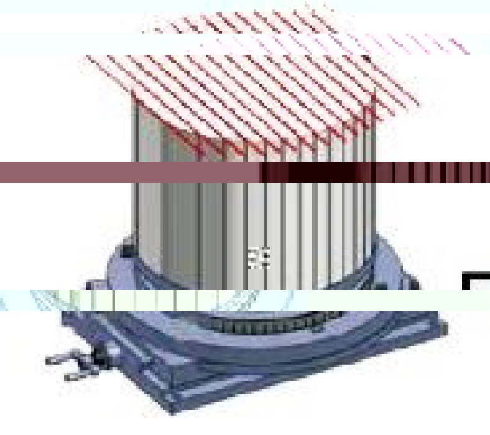
手表屏开方
squaring of watch screen

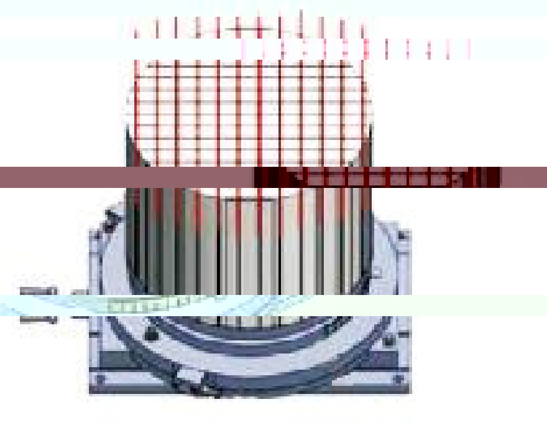
转90°开方
squaring turn by 90°

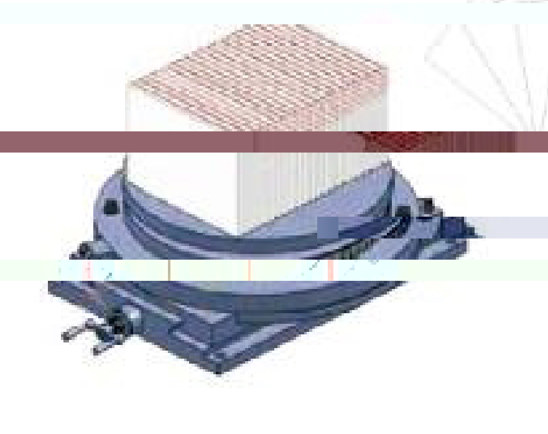
切片（12” LED屏）
slicing (12" LED display)

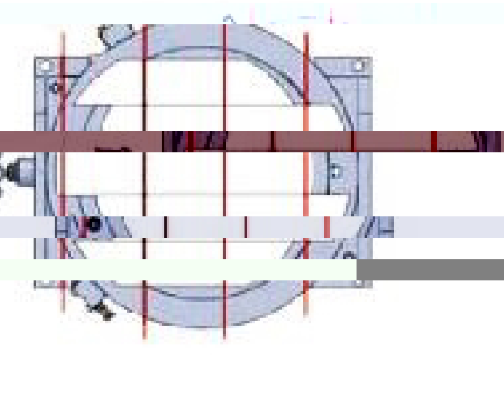
转90°开方
squaring turn by 90°

由于产品不断创新，本资料仅供参考，如有修改恕不通知，本公司保留最终解释权。
As products are improving gradually,the above information is subject to modification without notification,we company reserves the final explanation rights.